PLASTITALIA™ S.p.A.
high performance fittings

TECHNICAL DATASHEET

Electrofusion fittings

Tapping Tee

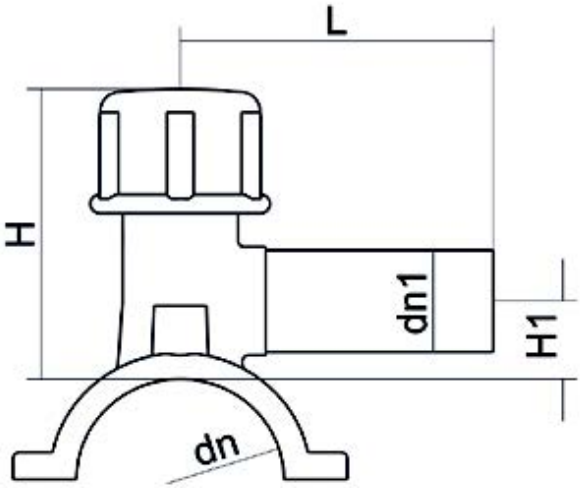

PRODUCT DETAILS	
ITEM CODE	CPCP075032C
d_n	75 - 32
SDR DESIGN	11

GEOMETRIC CHARACTERISTICS	
d_n	75
d_n1	32
H [mm]	94
H1 [mm]	24
L [mm]	98
Mass	0.3

*The pictures are for illustrative purposes only. the product may differ in color and / or some of its parts

PLASTITALIA SPA reserves the right to revise this specification, while maintaining compliance with the requirements of the product without prior notice. Tolerance on diameters and thickness according to the standards unless otherwise specified. Tolerance: ± 5%

Via Ferrara - 98061 - Brolo (ME) - Italy tel. +39 0941 536311 fax +39 0941 561476 info@plastitaliaspa.com
www.plastitaliaspa.com