PLASTITALIA™ S.p.A.
high performance fittings

TECHNICAL DATASHEET

Spigot Fittings

ELBOW 90° LONG SPIGOT

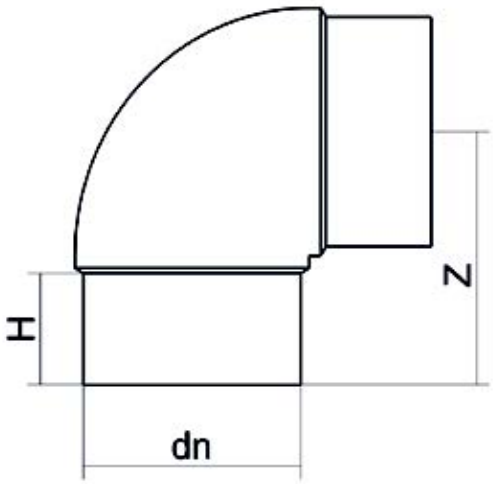

PRODUCT DETAILS	
ITEM CODE	G9P315B
d_n	315
SDR DESIGN	17

GEOMETRIC CHARACTERISTICS	
d_n	315
H [mm]	153
Z [mm]	349
Mass	16.2

*The pictures are for illustrative purposes only. the product may differ in color and / or some of its parts

PLASTITALIA SPA reserves the right to revise this specification, while maintaining compliance with the requirements of the product without prior notice. Tolerance on diameters and thickness according to the standards unless otherwise specified. Tolerance: ± 5%

Via Ferrara - 98061 - Brolo (ME) - Italy tel. +39 0941 536311 fax +39 0941 561476 info@plastitaliaspa.com
www.plastitaliaspa.com